TOSHIBA

Main Schematic

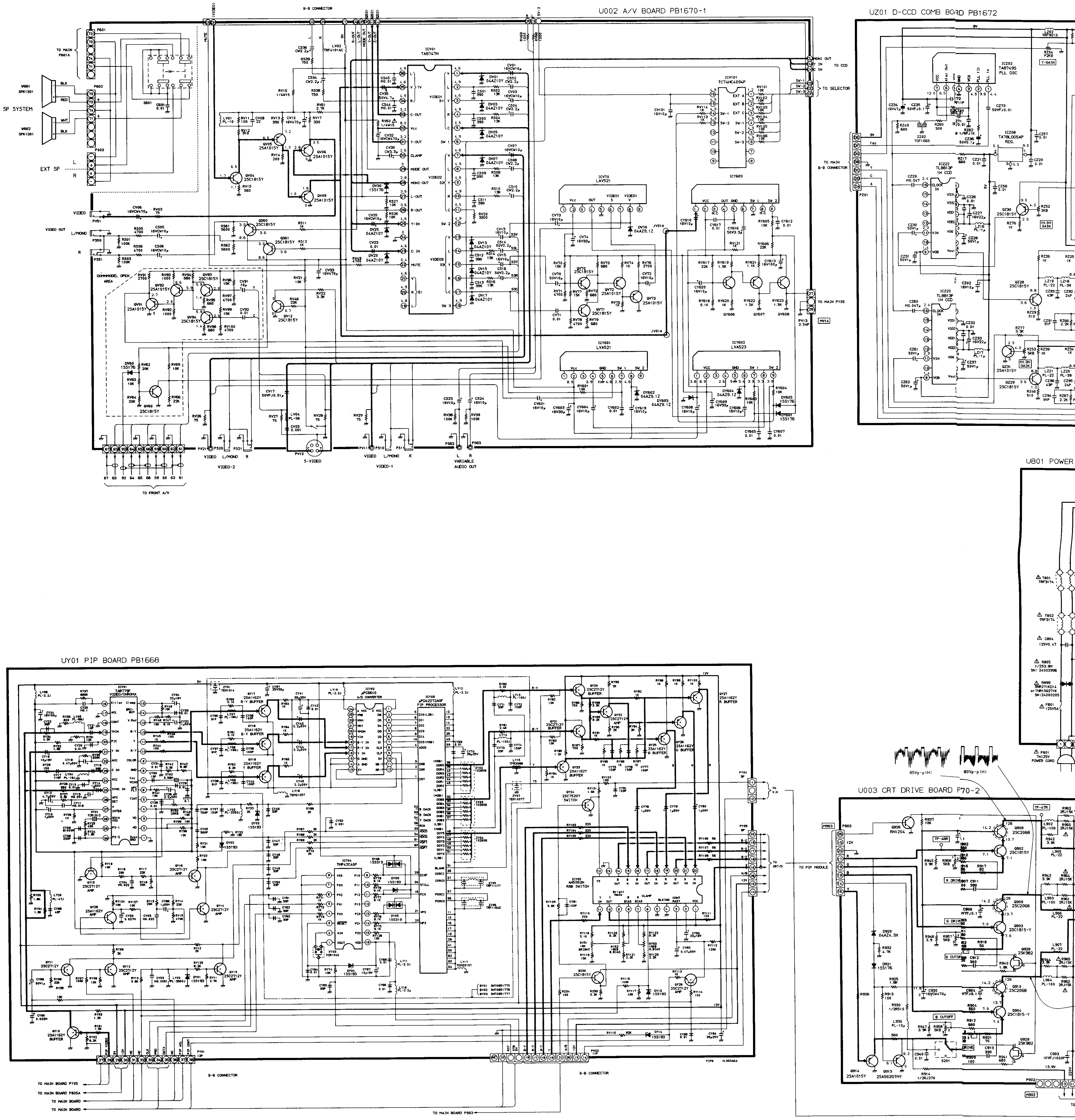
U002 A/V BOARD PB1670-1
UZ01 D-CCD COMB BORD PB1672
U801 POWER
UY01 PIP BOARD PB1668
U003 CRT DRIVE BOARD P70-2
B-B CONNECTOR
TO MAIN P601A
SP SYSTEM
EXT SP
ICV01 TA8747N
ICV101 TC74HC4094P
ICV70 LA7521
ICY603
ICY601 LVA521
ICY602 LVA523
TO CCD
TO SELECTOR
TO MAIN B-B CONNECTOR
TO MAIN PY05
VIDEO-2
S-VIDEO
VIDEO-1
VARIABLE AUDIO OUT
TO FRONT A/V
ICZ02 TA8749S PLL OSC
ICZ08 TA78L005AP REG.
ICZ22 TL8813P 1H CCD
ICZ23 TL8813P 1H CCD
ICY01 TA8776N VIDEO/CHROMA
ICY02 μPC661G A/D CONVERTER
ICY03 μPD42272AGF PIP PROCESSOR
ICY04 TMP42C40P
ICY05 AN5352N RGB SWITCH
TO V.M
TO CRT/D
TO PIP MODULE
TO MAIN BOARD PY05
TO MAIN BOARD P805A
TO MAIN BOARD
TO MAIN BOARD P903
85Vp-p(H)
80Vp-p(H)
TP-47R
TP-46R
R DRIVE
G DRIVE
G CUTOFF
B CUTOFF
B DRIVE
S201

Toshiba: Color TV Model CF3566A & CX37662

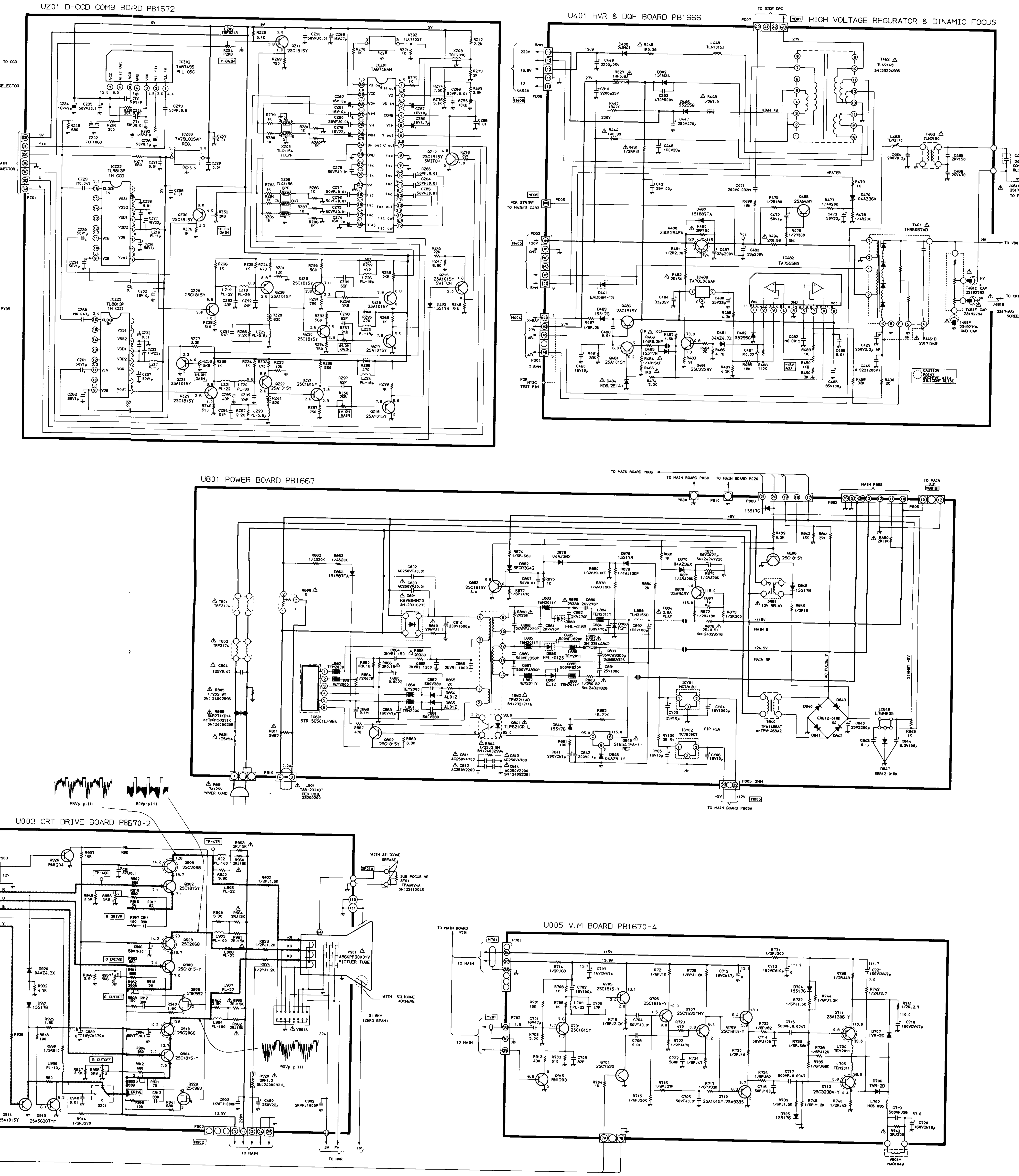
UZ01 D-CCD COMB BOARD PB1672
U401 HVR & DQF BOARD PB1666
HIGH VOLTAGE REGURATOR & DINAMIC FOCUS
U801 POWER BOARD PB1667
U003 CRT DRIVE BOARD PB670-2
U005 V.M BOARD PB1670-4
TO SIDE DPC
TO MAIN BOARD P885
TO MAIN BOARD P030
TO MAIN BOARD P020
TO MAIN BOARD P805A
TO MAIN BOARD H701
TO MAIN
TO HVR
TO V901
TO FOCUS
TO CRT DRIVE BOARD
SCREEN LEAD
POWER CORD
DEG COIL
PICTURE TUBE
WITH SILICONE GREASE
WITH SILICONE ADCHEVE
SUB FOCUS VR
31.6KV (ZERO BEAM)
85Vp-p(H)
80Vp-p(H)
90Vp-p(H)
MAIN B
MAIN 5P
+115V
+24.5V
STANBY +5V
AC PULSE 7
12V RELAY
PIP REG.
CAUTION

DIFFERENCES BETWEEN US AND CANADA MODELS

LOCATION NUMBER	CF3566A USA	CX37662 CANADA
U902	PB1665	PB1896
H001	EL815L1	EL815

Main Schematic

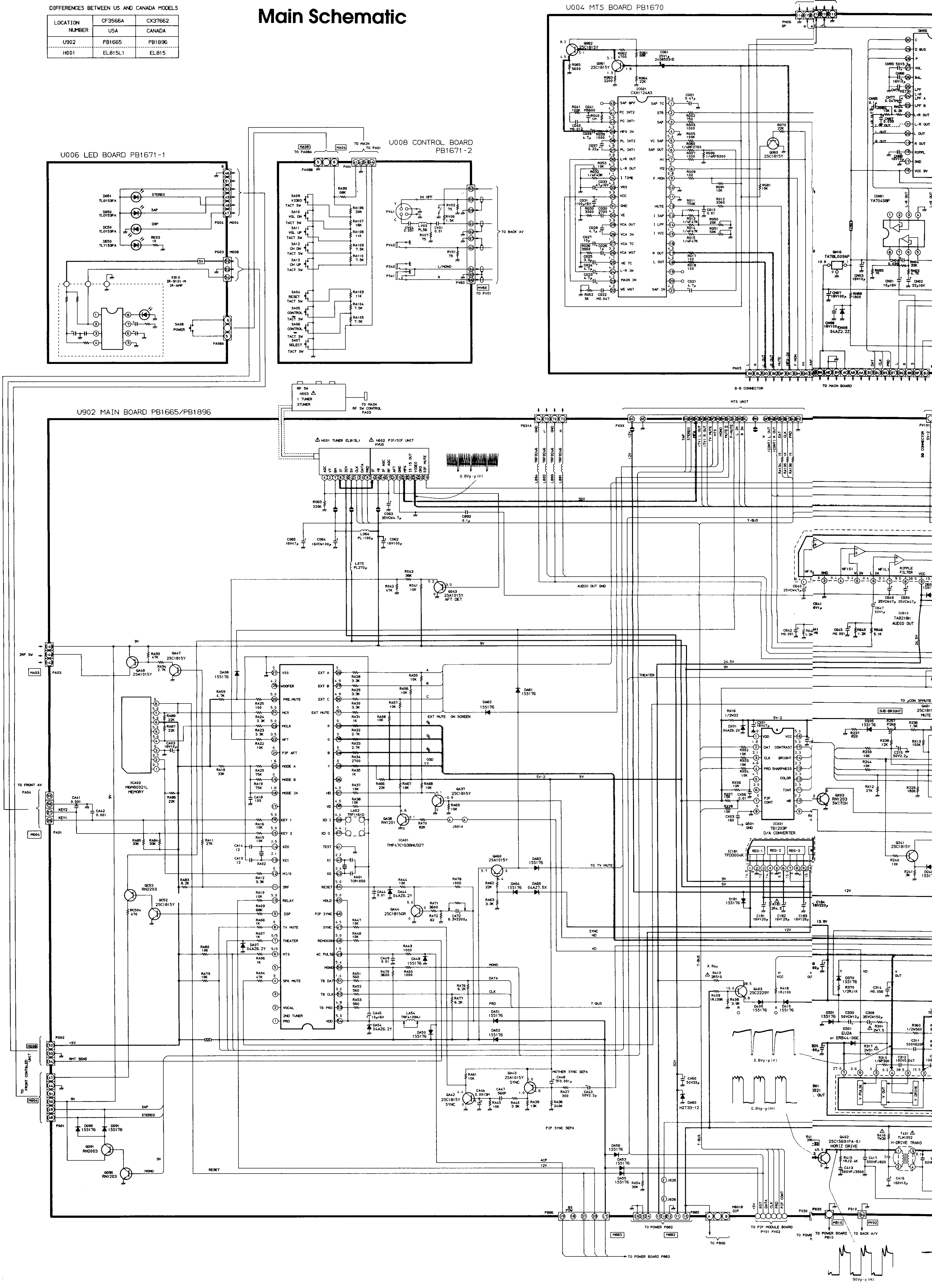
U004 MTS BOARD PB1670
U006 LED BOARD PB1671-1
U008 CONTROL BOARD PB1671-2
U902 MAIN BOARD PB1665/PB1896
CXA1124AS
TO BACK AV
TO MAIN BOARD
B-B CONNECTOR
MTS UNIT
H001 TUNER EL815L1
H002 PIF/SIF UNIT
0.8Vp-p(H)
AFT DET
TA8218H AUDIO OUT
MEMORY
TMP47C1638NU327
TB1203P D/A CONVERTER
HORIZ DRIVE
H-DRIVE TRANS
0.8Vp-p(V)
0.8Vp-p(H)
90Vp-p(H)
TO FRONT AV
TO FRONT CONTROL UNIT
TO POWER BOARD P802
TO POWER BOARD P803
TO P806
TO PIP MODULE BOARD
TO POWER BOARD P810
TO BACK A/V

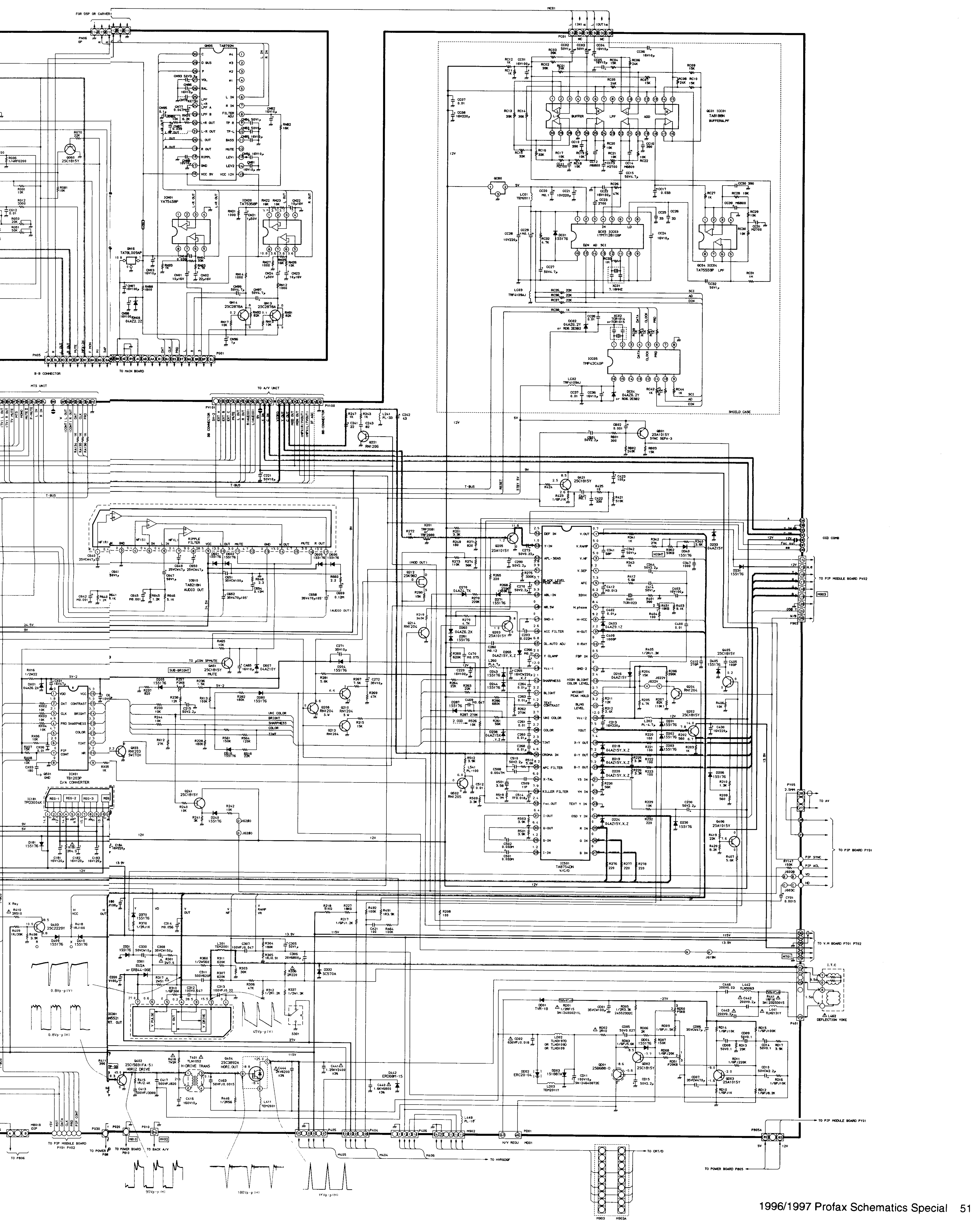
FOR DSP OR CARVER
TO MAIN BOARD
B-B CONNECTOR
MTS UNIT
TO A/V UNIT
SHIELD CASE
QC01 ICC01 TA8188N BUFFER&LPF
QC03 ICC03 YM7128B10P
ICC05 TMP42C40P
QC04 ICC04 TA75558P LPF
QN06 TA8792N
ICN01 YA75458P
ICN20 TA75358P
QN16 TA78L009AP
IC501 TA8754DN V/C/D
IC610 TA8218H AUDIO OUT
ICX01 TB1203P D/A CONVERTER
IC181 TPD3004K
IC301 LN5521 RT. OUT
CCD COMB
TO PIP MODULE BOARD PV02
TO AV
TO PIP BOARD PY01
TO V.M BOARD P701 P702
DEFLECTION YOKE
I.T.C
TO PIP MODULE BOARD PY01
TO POWER BOARD P805
TO CRT/D
TO HVR&DGF
H/V REGU
HORIZ DRIVE
H-DRIVE TRANS
HORI. OUT
TO PIP MODULE BOARD PY01 PV02
TO POWER BOARD P810
TO BACK A/V
TO P806
90Vp-p(H)
180Vp-p(H)
1KVp-p(H)
45Vp-p(V)
0.8Vp-p(V)
0.8Vp-p(H)
T-BUS
SUB-BRIGHT
TO μCON SPMUTE
SWITCH
MUTE
SYNC SEPA-3
AUDIO OUT

TOSHIBA

Main Schematic

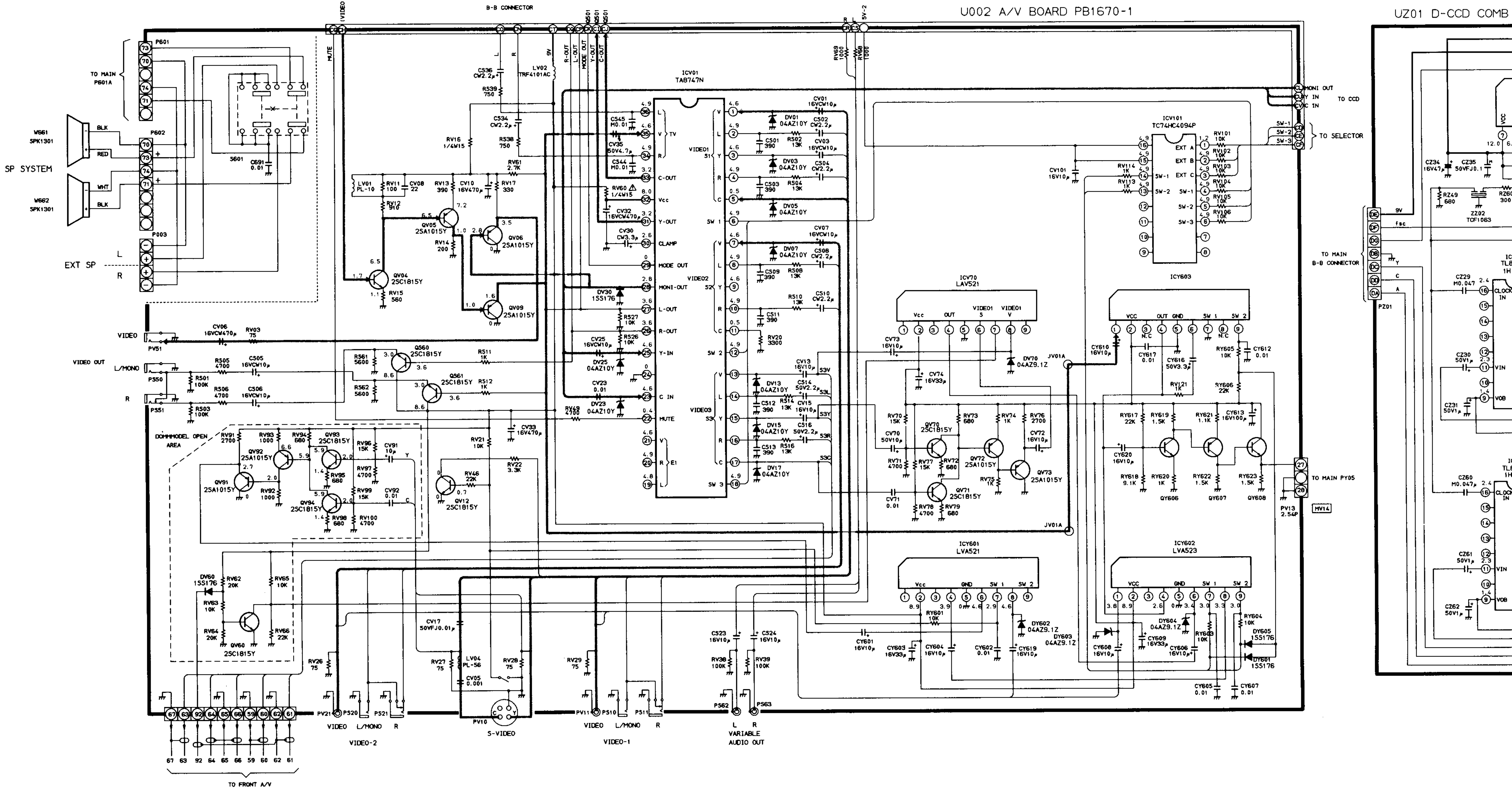
U002 A/V BOARD PB1670-1
UZ01 D-CCD COMB
B-B CONNECTOR
TO MAIN P601A
P601
P602
P003
SP SYSTEM
W661 SPK1301
W662 SPK1301
BLK
RED
WHT
EXT SP
L
R
S601
C591 0.01
MUTE
(VIDEO)
VIDEO
PV51
VIDEO OUT
L/MONO
P550
P551
DOMMMODEL OPEN AREA
ICV01 TA8747N
C-OUT
Vcc
Y-OUT
CLAMP
MODE OUT
MONI-OUT
L-OUT
R-OUT
Y-IN
C IN
MUTE
VIDEO1
VIDEO2
VIDEO3
SW 1
SW 2
SW 3
R-OUT
L-OUT
MODE OUT
Y-OUT
C-OUT
Q501
9V
5V-2
ICV101 TC74HC4094P
EXT A
EXT B
EXT C
SW-1
SW-2
SW-3
ICY603
ICV70 LAV521
ICY601 LVA521
ICY602 LVA523
MONI OUT
Y IN
C IN
TO CCD
TO SELECTOR
TO MAIN PY05
PV13 2.54P
MV14
JV01A
TO MAIN B-B CONNECTOR
PZ01
9V
fsc
VIDEO-2
VIDEO-1
S-VIDEO
PV10
PV21
P520
P521
PV11
P510
P511
P562
P563
VARIABLE AUDIO OUT
TO FRONT A/V
67 63 92 64 65 66 59 60 62 61

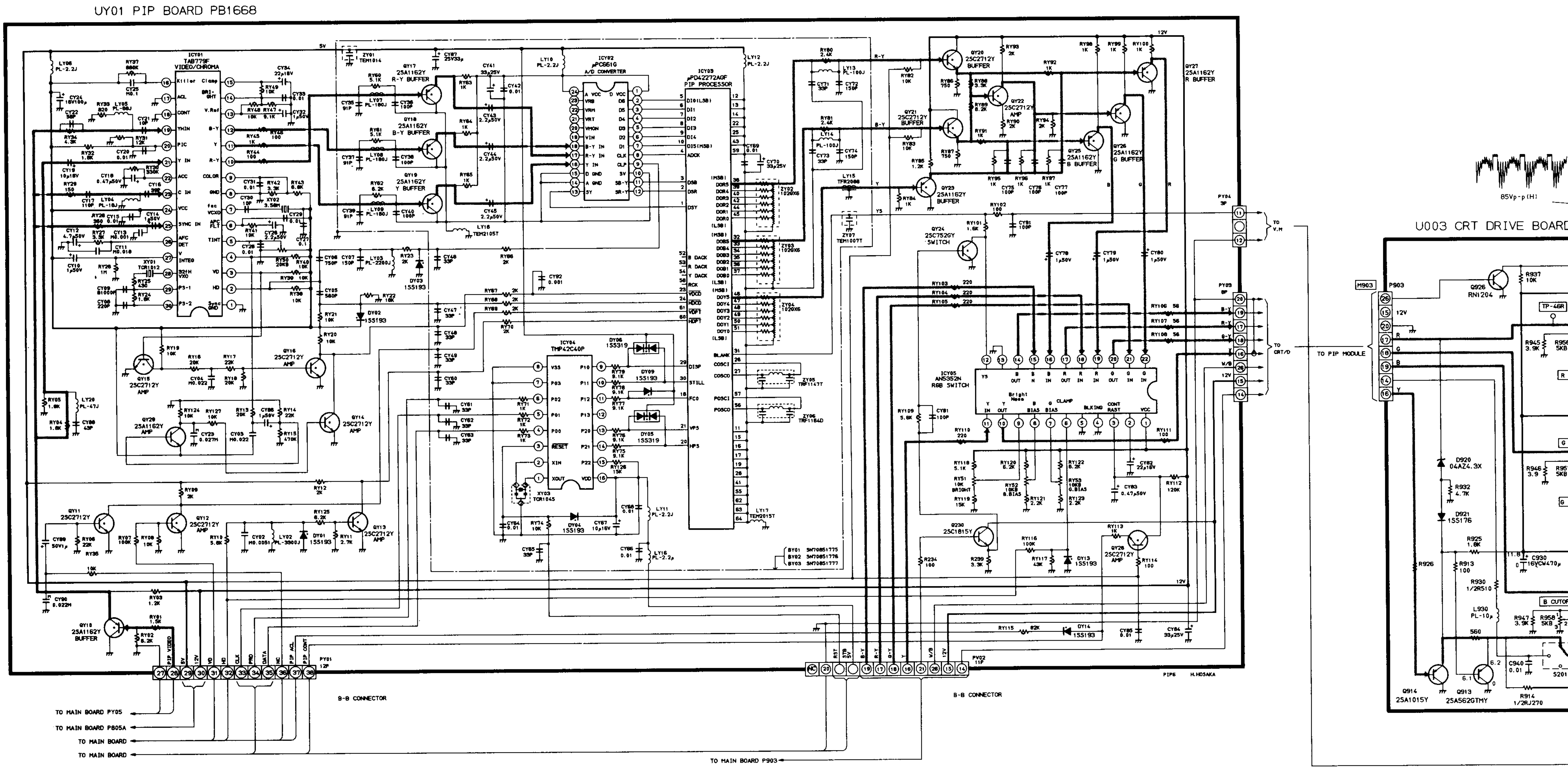
UY01 PIP BOARD PB1668
ICY01 TA8779F VIDEO/CHROMA
ICY02 μPC661G A/D CONVERTER
ICY03 μPD42272AGF PIP PROCESSOR
ICY04 TMP42C40P
ICY05 AN5352N RGB SWITCH
QY17 2SA1162Y R-Y BUFFER
QY18 2SA1162Y B-Y BUFFER
QY19 2SA1162Y Y BUFFER
QY20 2SC2712Y BUFFER
QY21 2SC2712Y BUFFER
QY22 2SC2712Y AMP
QY23 2SA1162Y BUFFER
QY24 2SC752GY SWITCH
QY25 2SA1162Y B BUFFER
QY26 2SA1162Y G BUFFER
QY27 2SA1162Y R BUFFER
QY28 2SC2712Y AMP
QY29 2SA1162Y AMP
QY16 2SC2712Y AMP
QY14 2SC2712Y AMP
QY11 2SC2712Y
QY12 2SC2712Y AMP
QY13 2SC2712Y AMP
QY15 2SC2712Y AMP
QY18 2SA1162Y BUFFER
Q230 2SC1815Y
PIP VIDEO
5V
12V
VD
HD
CLK
PRO
DATA
NC
PIP ACL
PIP CONT
PY01 12P
B-B CONNECTOR
TO MAIN BOARD PY05
TO MAIN BOARD P805A
TO MAIN BOARD
TO MAIN BOARD
RST
STB 5V
B-Y
R-Y
G-Y
Y
W/B
12V
PY02 11P
B-B CONNECTOR
TO MAIN BOARD P903
PY03 8P
TO CRT/D
PY04 3P
TO V.H
PIP5 H.HOSAKA
TO PIP MODULE
M903
P903
U003 CRT DRIVE BOARD
85Vp-p(H)
Q926 RN1204
Q914 2SA1015Y
Q913 2SA562GTMY
D920 04AZ4.3X
D921 1SS176
B CUTOFF
TP-48R

odel CF3566A & CX37662

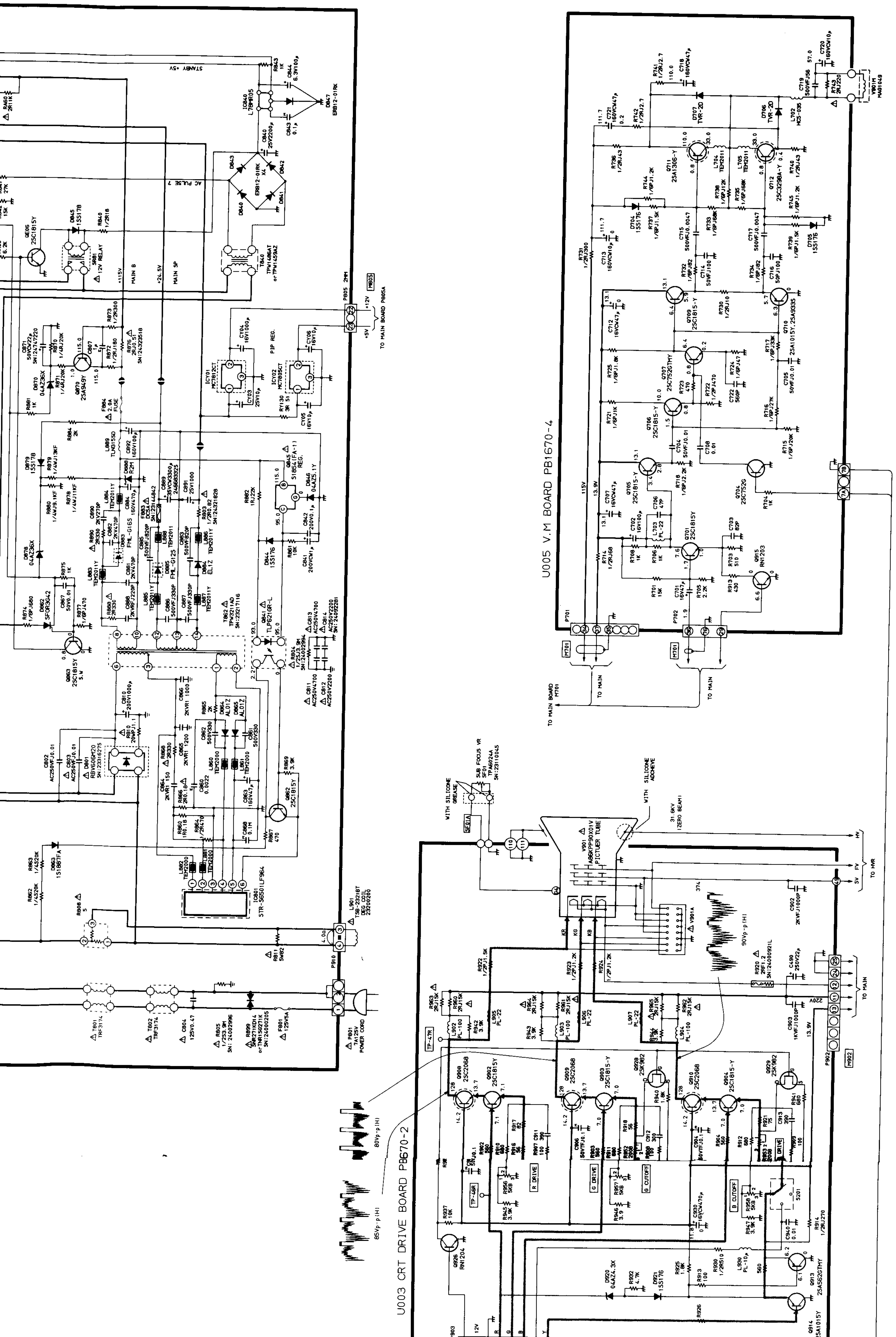
U005 V.M BOARD PB1670-4
U003 CRT DRIVE BOARD PB670-2
TO MAIN BOARD P805A
PIP REG.
STANBY +5V
AC PULSE 7
IC801 STR-S6501LF964
P801 7A125V POWER CORD
V901 A56KPP90X01V PICTURE TUBE
TO MAIN BOARD M701
TO MAIN
TO HVR
WITH SILICONE GREASE
WITH SILICONE ADHEYE
SUB FOCUS VR
31.6KV (ZERO BEAM)
90Vp-p(H)
80Vp-p(H)
85Vp-p(H)
R DRIVE
G DRIVE
B DRIVE
G CUTOFF
B CUTOFF

Toshiba: Color TV Model CF

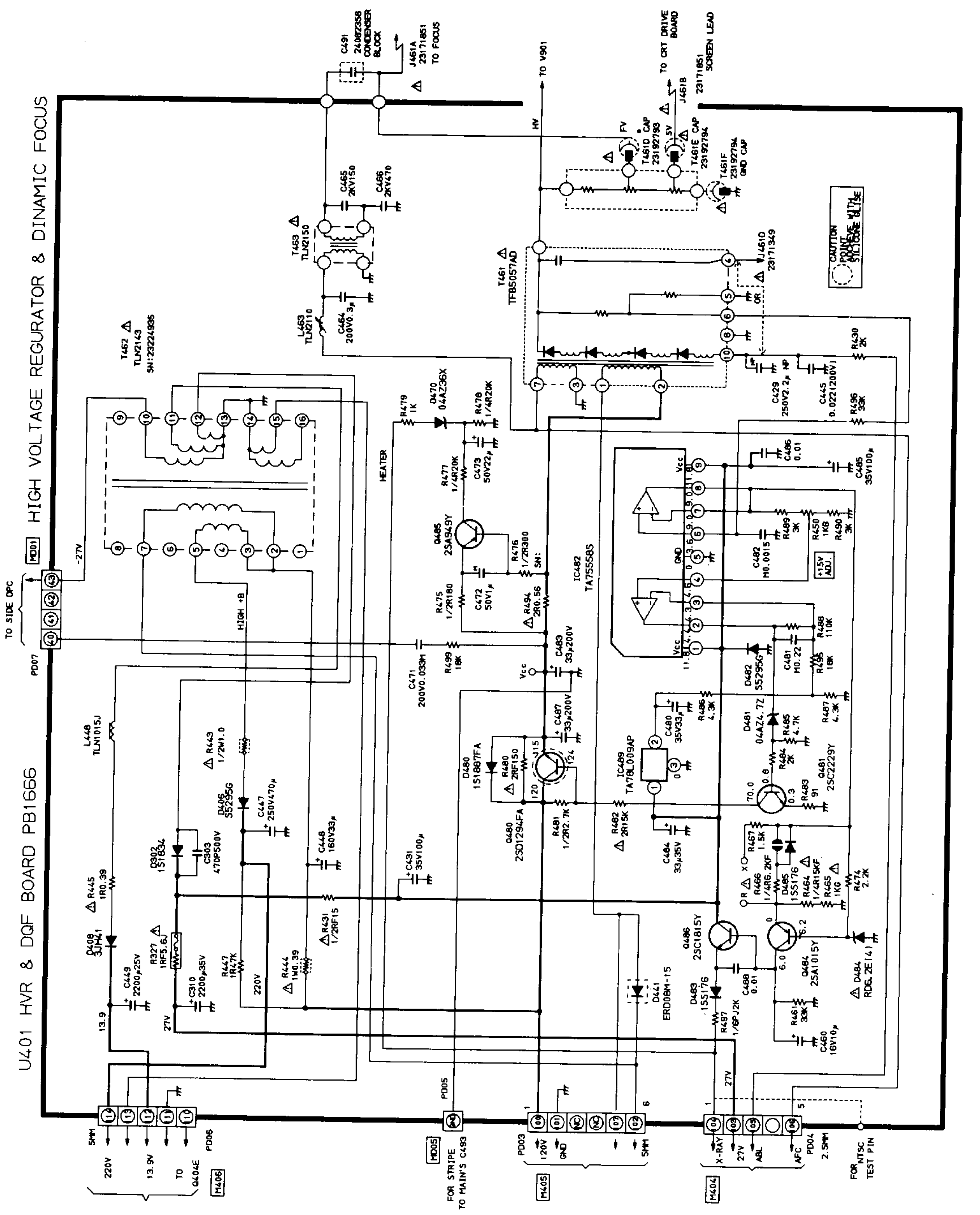
U401 HVR & DQF BOARD PB1666
HIGH VOLTAGE REGURATOR & DINAMIC FOCUS
T461 TFB5057AD
IC482 TA75558S
IC489 TA78L009AP
T463 TLM2150
T462 TLN2143
L448 TLN1015J
C491 24882358 CONDENSER BLOCK
J461A 23171851 TO FOCUS
TO V901
TO CRT DRIVE BOARD
J461B 23171851 SCREEN LEAD
CAUTION POINT VOLTAGE WITH HIGH VOLTAGE
HD01
TO SIDE DPC
PD07
PD06
PD05
PD03
PD04
H406
H405
H404
H05
FOR STRIPE TO MAIN'S C493
FOR NTSC TEST PIN
220V
13.9V
TO Q404E
120V
GND
X-RAY
27V
ABL
AFC
HEATER
HIGH +B

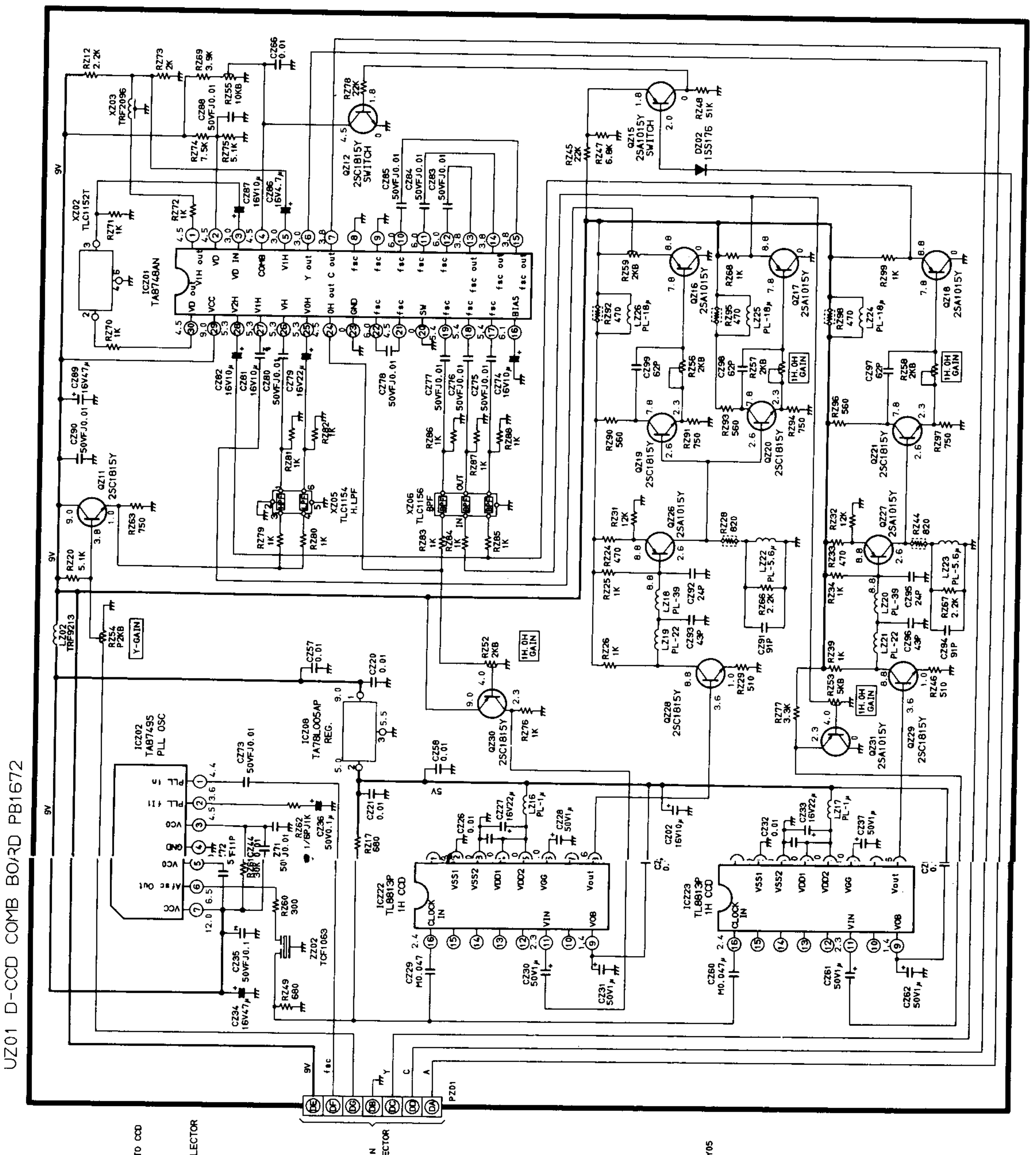
UZ01 D-CCD COMB BORD PB1672
IC201 TA8748AN
IC202 TA8745S PLL OSC
IC208 TA78L005AP REG.
IC222 TL8813P 1H CCD
IC223 TL8813P 1H CCD
XZ03 TRF2096
XZ02 TLC1152T
XZ05 TLC1154 H.LPF
XZ06 TLC1156 BPF
Y-GAIN
1H.0H GAIN
QZ12 2SC1815Y SWITCH
QZ15 2SA1015Y SWITCH
PZ01

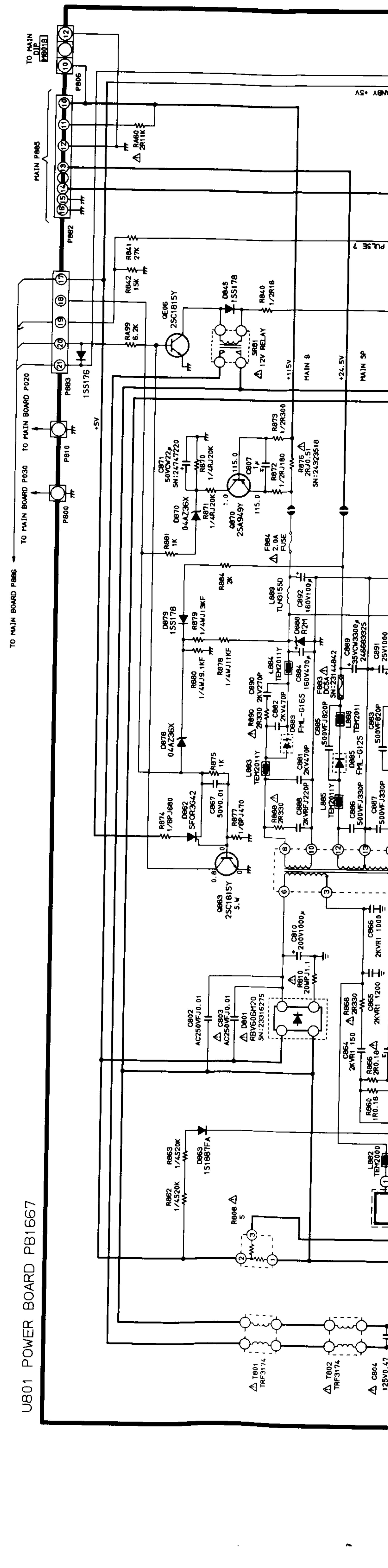
U801 POWER BOARD PB1667
TO MAIN DIP H901B
MAIN P805
P806
P802
P803
P810
P800
TO MAIN BOARD P020
TO MAIN BOARD P030
TO MAIN BOARD P886
SR81 12V RELAY
F804 2.0A FUSE
D801 RBV606H20
T801 TRF3174
T802 TRF3174
+115V
+24.5V
MAIN B
MAIN SP

DIFFERENCES BETWEEN US AND CANADA MODELS

LOCATION NUMBER	CF3566A USA	CX37662 CANADA
U902	PB1665	PB1896
H001	EL815L1	EL815

Main Schematic

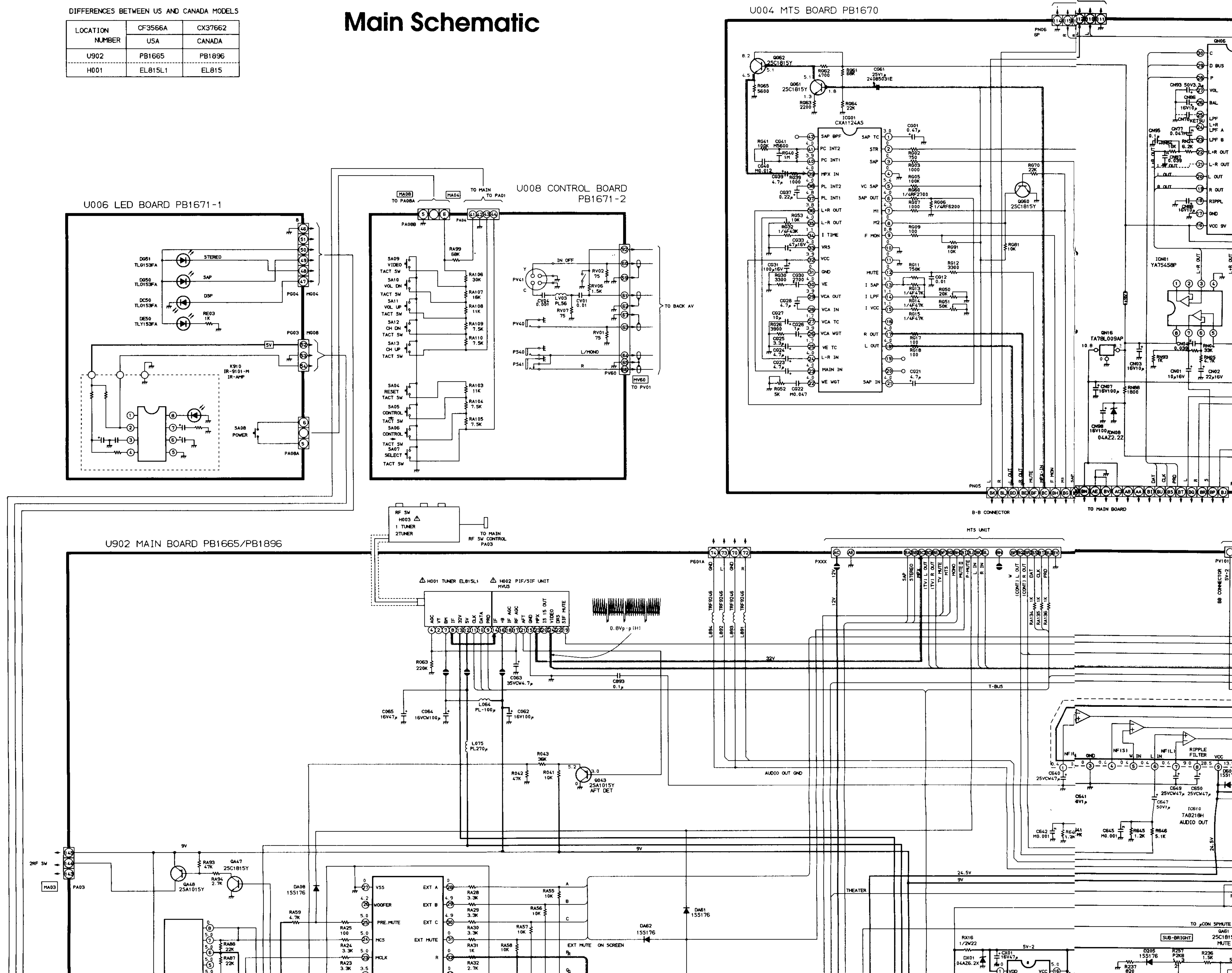
U004 MTS BOARD PB1670
U006 LED BOARD PB1671-1
U008 CONTROL BOARD PB1671-2
U902 MAIN BOARD PB1665/PB1896
H001 TUNER EL815L1
H002 PIF/SIF UNIT
H003 RF SW
ICG01 CXA1124AS
IC610 TA8216H AUDIO OUT
ICN01 YA7545BP
QN16 TA78L009AP
K910 IR-9101-M IR-AMP
TO BACK AV
TO MAIN BOARD
B-B CONNECTOR
MTS UNIT
BB CONNECTOR
TO MAIN RF SW CONTROL PA03
0.8Vp-p(H)
AUDIO OUT GND
T-BUS
32V
9V
24.5V
THEATER
EXT MUTE ON SCREEN
SUB-BRIGHT
TO μCON SPMUTE

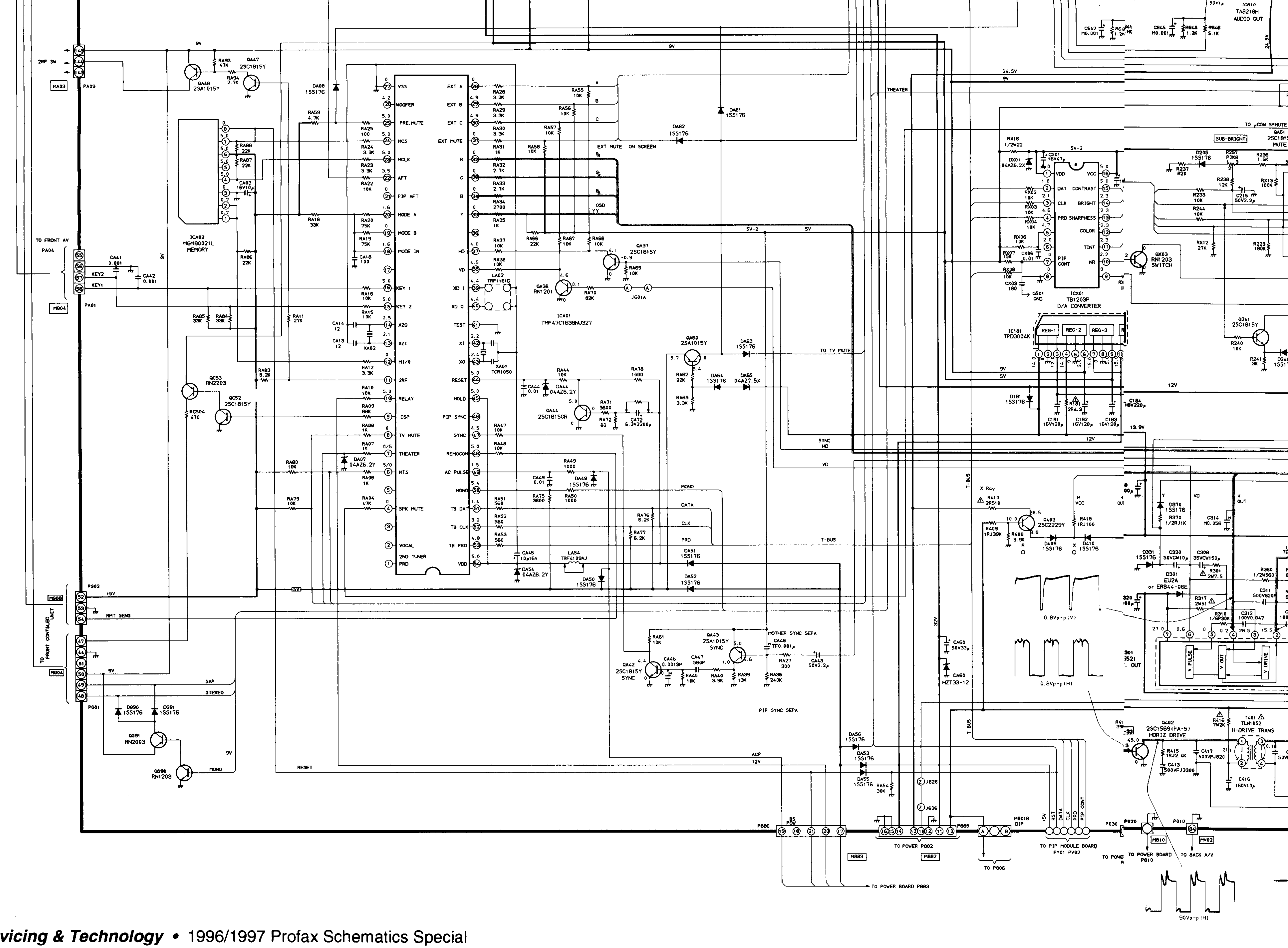
ICA01
TMP47C1638NJ327
ICA02
M6M80021L
MEMORY
ICX01
TB1203P
D/A CONVERTER
IC181
TPD3004K
REG-1
REG-2
REG-3
IC610
TA8218H
AUDIO OUT
Q402
2SC1569(FA-5)
HORIZ DRIVE
T401
TLN1052
H-DRIVE TRANS
Q403
2SC2229Y
QX03
RN1203
SWITCH
QA61
2SC1815Y
MUTE
QA42
2SC1815Y
SYNC
QA43
2SA1015Y
SYNC
QA44
2SC1815GR
QA60
2SA1015Y
QA37
2SC1815Y
QA38
RN1201
QC52
2SC1815Y
QC53
RN2203
Q091
RN2003
Q090
RN1203
QA47
2SC1815Y
QA48
2SA1015Y
Q241
2SC1815Y
VSS
WOOFER
PRE.MUTE
HCS
MCLK
AFT
PIP AFT
MODE A
MODE B
MODE IN
KEY 1
KEY 2
XZO
XZI
MI/O
2RF
RELAY
DSP
TV MUTE
THEATER
MTS
SPK MUTE
VOCAL
2ND TUNER
PRD
EXT A
EXT B
EXT C
EXT MUTE
R
G
B
Y
HD
VD
XD I
XD O
TEST
XI
XO
RESET
HOLD
PIP SYNC
SYNC
REMOCON
AC PULSE
MONO
TB DAT
TB CLK
TB PRD
VDD
VDD
DAT
CLK
PRD
PIP CONT
VCC
CONTRAST
BRIGHT
SHARPNESS
COLOR
TINT
NR
2RF 5V
MA03
PA03
TO FRONT AV
PA04
PA01
MG04
KEY1
KEY2
P002
+5V
RMT SENS
TO FRONT CONT&LED UNIT
MG00
MG04
P001
9V
SAP
STEREO
MONO
RESET
EXT MUTE
ON SCREEN
OSD
5V-2
5V
TO TV MUTE
SYNC
HD
VD
T-BUS
MOTHER SYNC SEPA
PIP SYNC SEPA
ACP
12V
32V
THEATER
24.5V
9V
13.9V
SUB-BRIGHT
TO μCON SPMUTE
X Ray
H VCC
V OUT
VD
V PULSE
V OUT
V DRIVE
0.8Vp-p(V)
0.8Vp-p(H)
90Vp-p(H)
P806
B5
POW
TO POWER BOARD P803
MG03
TO POWER P802
MG02
P805
TO P806
M801B
DIP
+5V
RST
DATA
CLK
PRD
PIP CONT
TO PIP MODULE BOARD
PY01 PV02
P030
TO POWER BOARD P810
P020
MB10
P010
TO BACK A/V
MV02
D301
EU2A
or ERB44-06E

TO PIP MODULE BOARD PV02
M903
P903
IC610 TA8218H AUDIO OUT
(AUDIO OUT)
24.5V
9V
TO µCON SPMUTE
SUB-BRIGHT
QA61 2SC1815Y MUTE
ICX01 TB1203P D/A CONVERTER
VDD
DAT
CLK
PRD SHARPNESS
PIP CONT
VCC
CONTRAST
BRIGHT
COLOR
TINT
NR
UNI COLOR
BRIGHT
SHARPNESS
COLOR
TINT
QX03 RN1203 SWITCH
IC181 TPD3004K
REG-1
REG-2
REG-3
Q241 2SC1815Y
Q212 2SK982
Q214 RN1204
Q203 2SA1015Y
Q208 RN1204 S.W
Q210 RN1204 S.W
Q213 RN1204
Q502 RN1205
BLACK LEVEL PEAK HOLD
ABL-IN
NR.SW
GND-1
ACC FILTER
DL.AUTO ADJ
Y CLAMP
Vcc-1
SHARPNESS
BLIGHT
TEXT CONTRAST
UNI COLOR
COLOR
TINT
CROMA IN
APC FILTER
X-TAL
KILLER FILTER
fsc.OUT
I-OUT
Q-OUT
Q-IN
I-IN
IC501 TA8754DN V/C/D
V.SEP
AFC
32fH
H.phase
H-VCC
H-OUT
X-RAY
FBP IN
GND-2
HIGH BLIGHT COLOR LEVEL
WHIGHT PEAK HOLD
BLMG LEVEL
Vcc-2
YOUT
R-Y OUT
G-Y OUT
B-Y OUT
YS IN
YM IN
TEXT Y IN
OSD Y IN
R IN
G IN
B IN
Q202 2SC1815Y
Q204 RN1204
Q405 2SC1815Y
Q406 2SA1015Y
13.9V
12V
PY05 2.5MM
TO AV
TO PIP BOARD PY01
PIP SYNC
PIP ACL
VD
HD
X Ray
Q403 2SC2229Y
H VCC
H OUT
V OUT
V NF
V RAMP VR
115V
TO V.M BOARD P701 P702
M701
J619N
I.T.C
L462 DEFLECTION YOKE
P401
IC301 AN5521 RT. OUT
V PULSE
V OUT
V DRIVE
0.8Vp-p(V)
0.8Vp-p(H)
45Vp-p(V)
S301
27V
Q402 2SC1569(FA-5) HORIZ DRIVE
T401 TLN1052 H-DRIVE TRANS
Q404 2SC3892A HORI.OUT
D442 ERD08M-15
QD01 2SB688-O
QD02 2SC1815Y
QD03 2SA1015Y
DD01 TVR-1B
DD02 ERC20-04
LD03 TEM2011Y
-27V
TO PIP MODULE BOARD PY01 PV02
+5V
RST
DATA
CLK
PRD
PIP CONT
M801B DIP
TO P806
TO POWER P P806
TO POWER BOARD P810
TO BACK A/V
P030
P020
P010
M810
HV02
P405
P404
P406
M902
PD01
H/V REGU
MD01
M405
M404
M406
TO HVR&DQF
TO CRT/D
M903
M903A
P805A
5V
TO POWER BOARD P805
TO PIP MODULE BOARD PY01
90Vp-p(H)
180Vp-p(H)
1KVp-p(H)

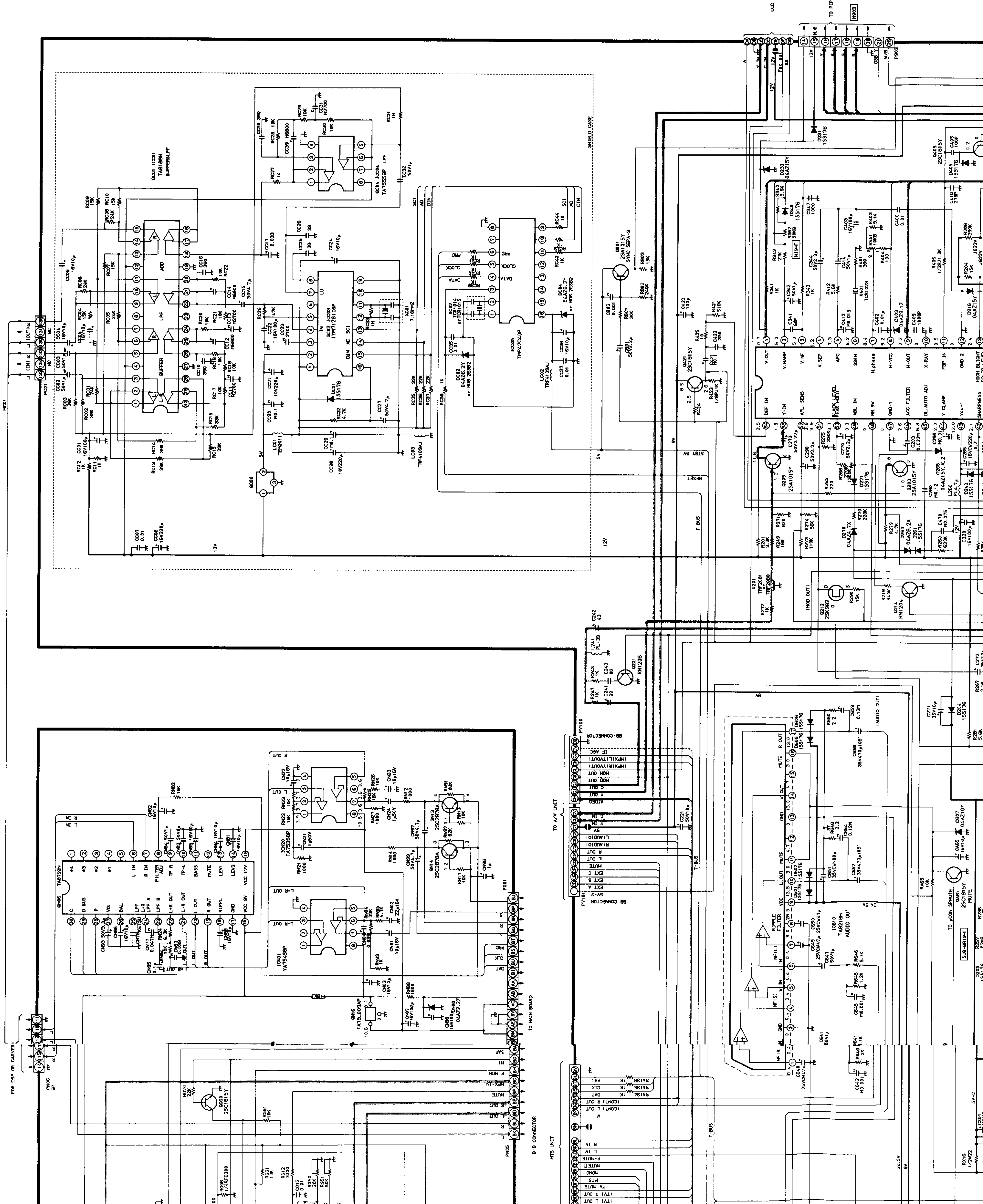
SHIELD CASE
CCD COMB
TO PIP MODULE BOARD PV02
P903
PC01
MC01
FOR DSP OR CARVER
PN06
PN05
TO MAIN BOARD
B-B CONNECTOR
MTS UNIT
TO A/V UNIT
BB CONNECTOR
PV100
PV101
T-BUS
STBY 5V
RESET
SUB-BRIGHT
TO µCON SP MUTE
AUDIO OUT
TA8186N
TA75558P
YM7128
TMP42C40P
TA8792N
TA75458P
TA78L009AP
TA8210H